THIRD ANGLE

DO NOT SCALE

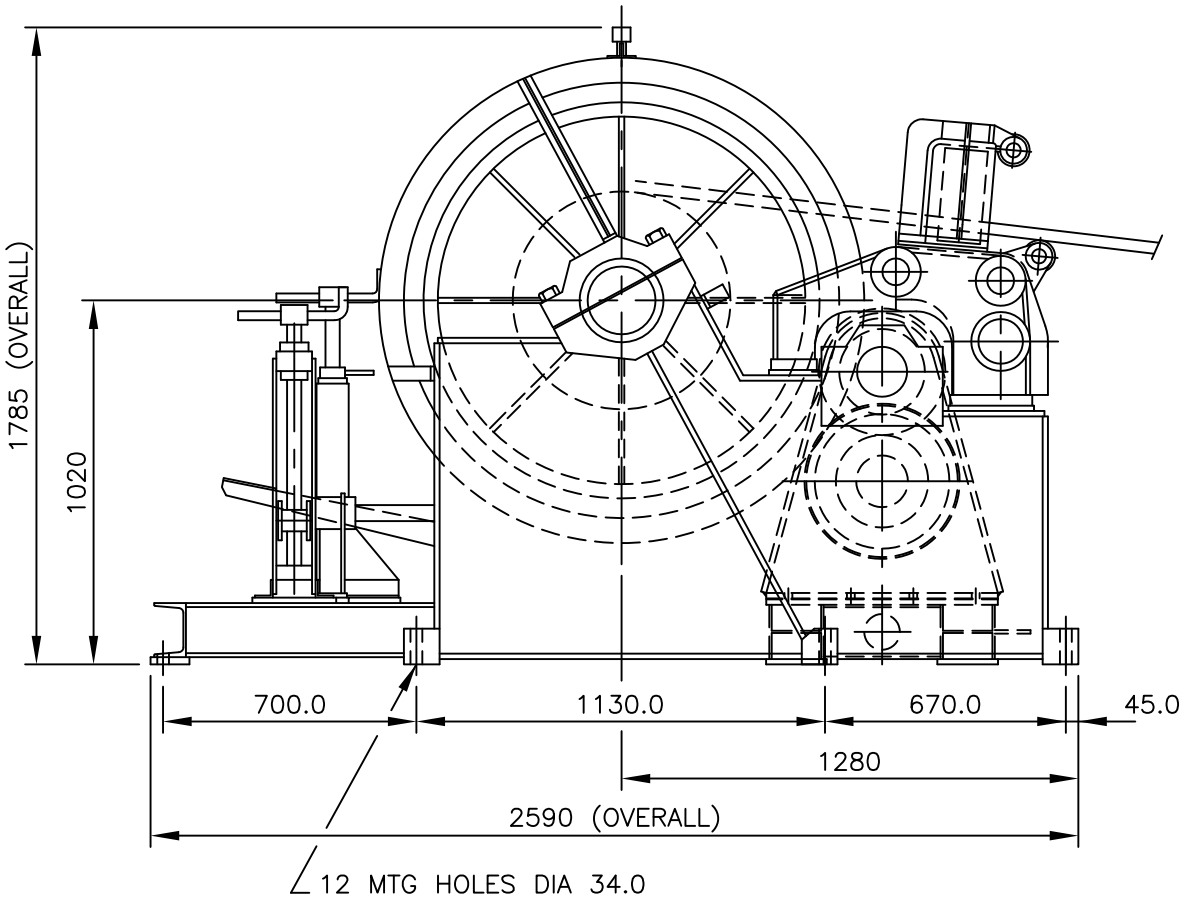

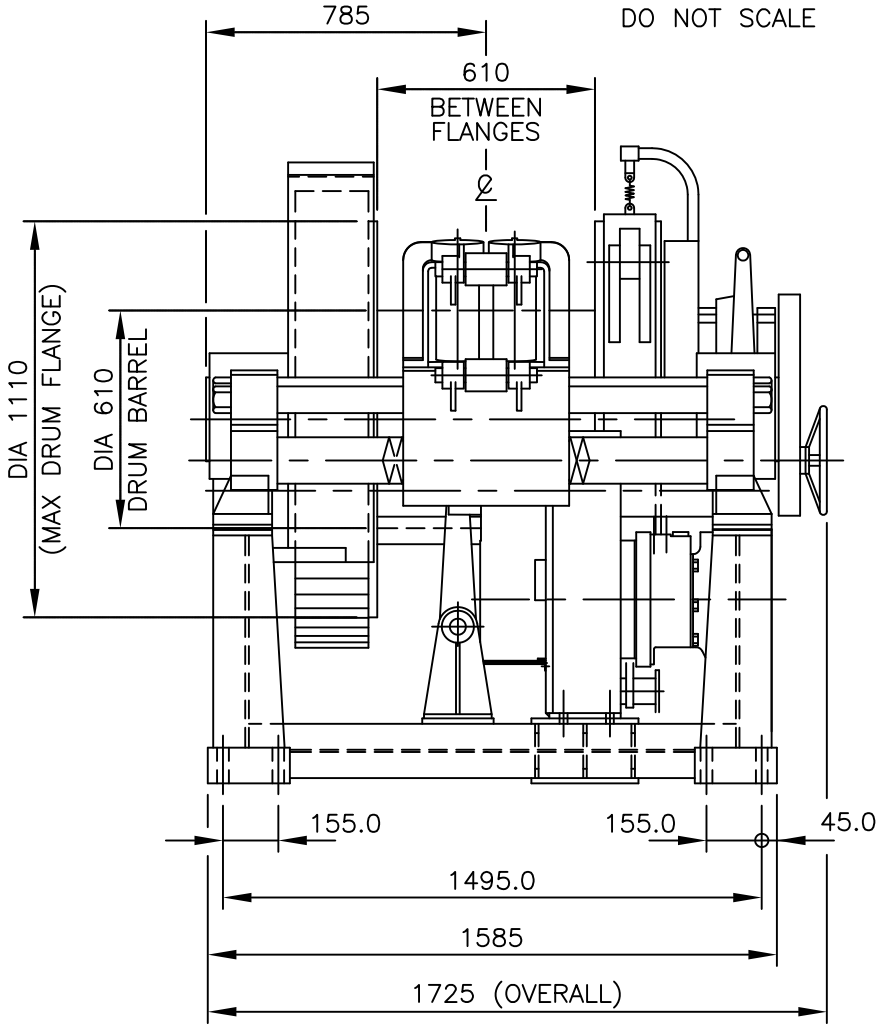

	C	A.C.
	B	
	A	
C.N.NUMBER	REV.	AUTH

SEE DRG NO B3768 FOR ROTREX NH25 WINCH FOOTPRINT DETAILS

TITLE ROTREX NH25 HYDRAULIC MOORING WINCH

TOLERANCES
NO DECIMAL PLACES ∓ 3.0MM
ONE DECIMAL PLACE ∓ 0.5MM
ROUGH M/C ∓ 0.25MM
FINISH M/C ∓ 0.025MM
OR AS STATED
GRIND TO LIMIT STATED

DRAWN	SCALE	JOB No	TITLE
C.R.	1:16		
CHECKED C.R.	DATE 01/02	DRG.No C7031	

Rotrex Winches
Website: www.rotrex.co.uk
ABERDEEN Tel: (01224) 771818
DERBYSHIRE Tel: (01773) 603997
MOTHERWELL Tel: (01698) 744348